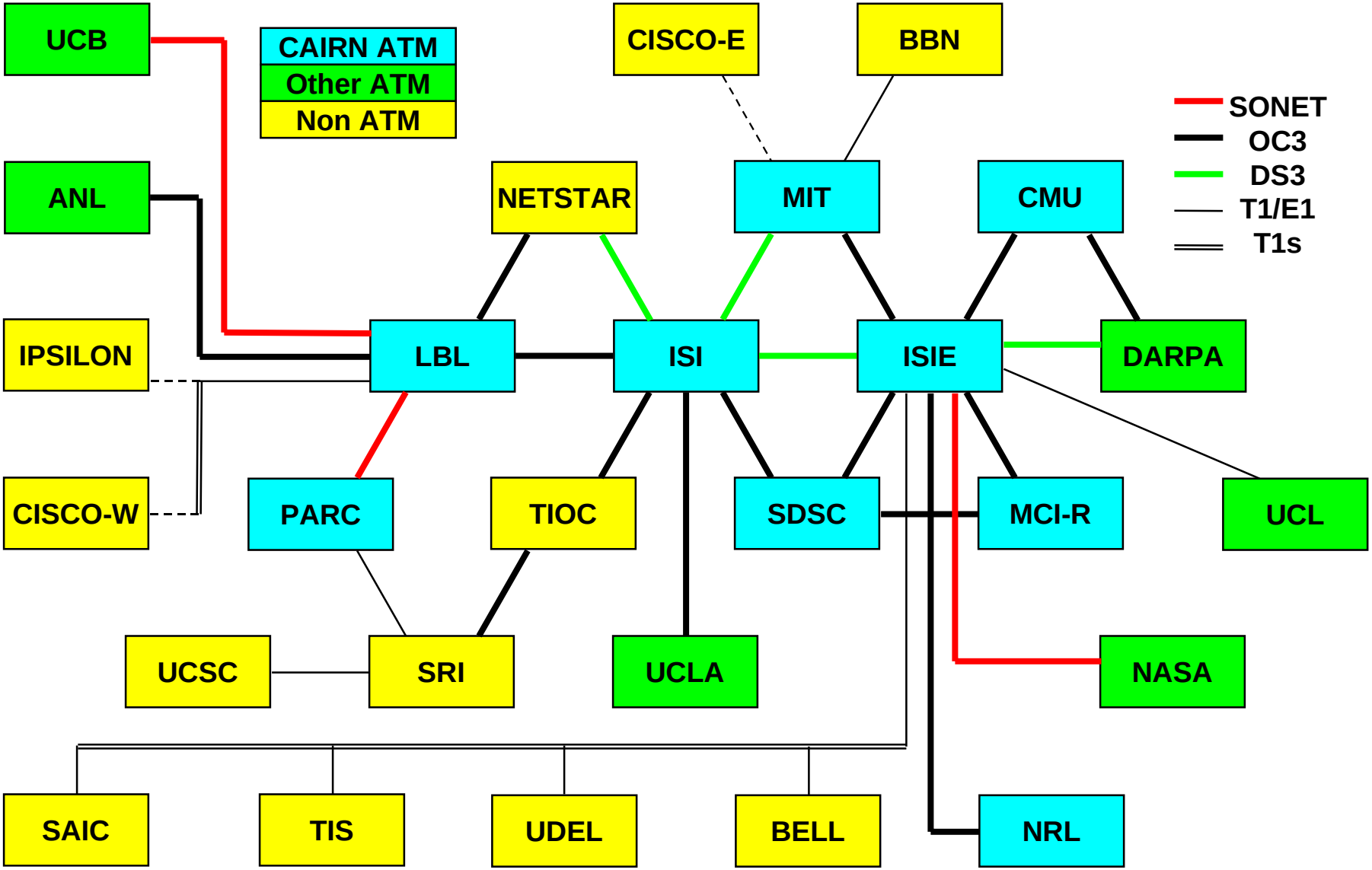

CAIRN Research Network